CAMERICH

MALAYSIA

PIXEL TALL SIDEBOARD

Technical Specifications:

- Exterior finish is available in matte Tuscan Tan lacquer or matte Denim Grey lacquer
- Interior is finished in Driftwood melamine
- Push-operated doors and drawers
- Black metallic painted steel base
- Door hinges come with dampers
- Full extension push-pull drawer runners

CAMERICH

MALAYSIA
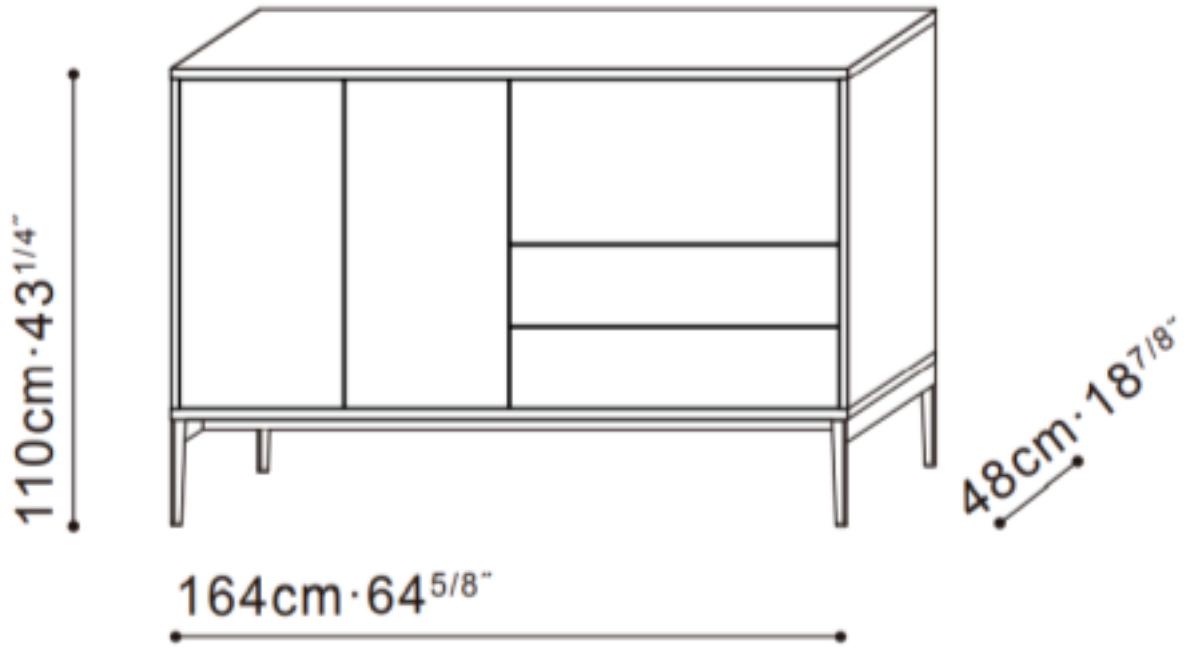
PIXEL TALL SIDEBOARD